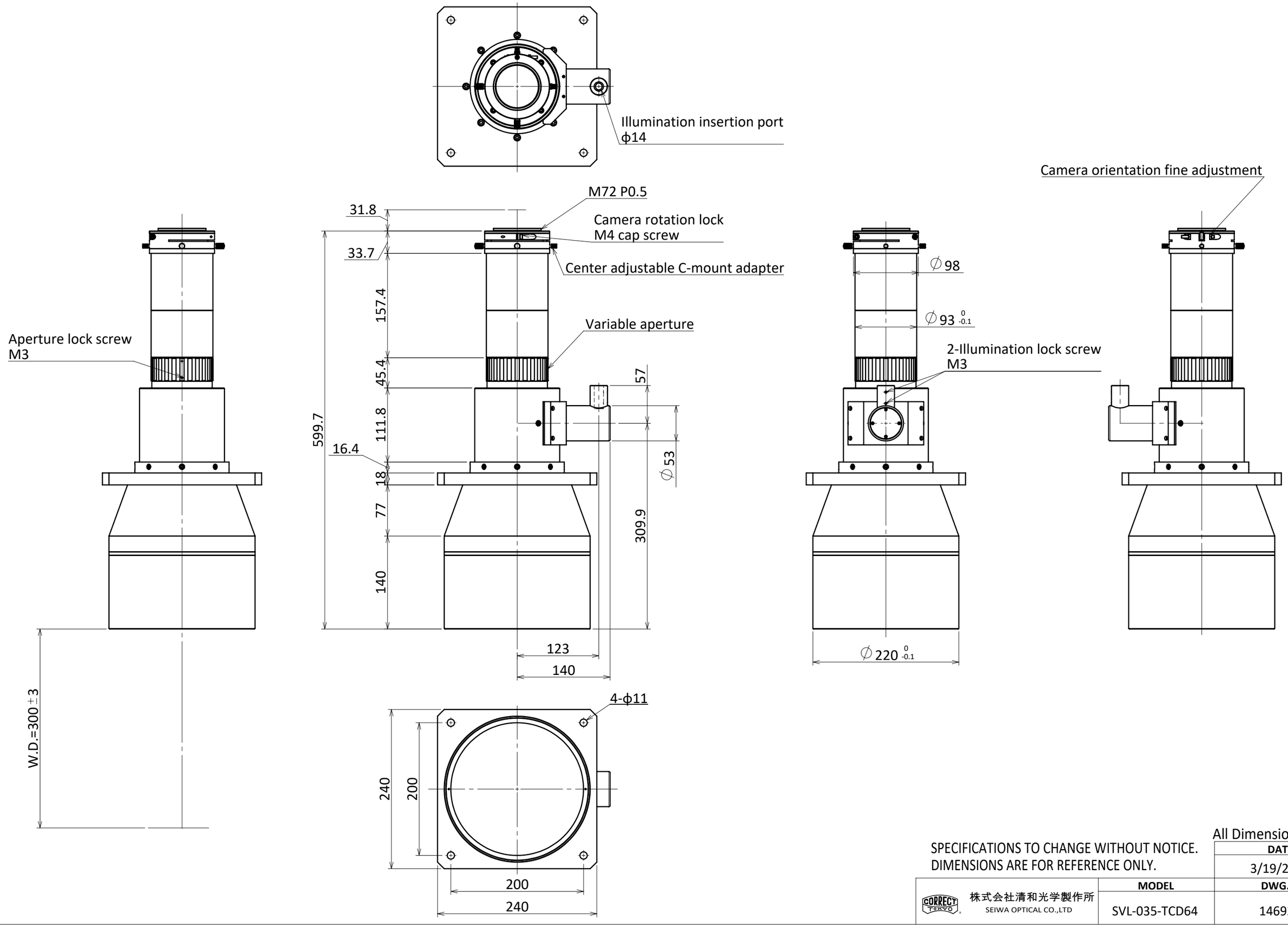

All Dimension in mm

SPECIFICATIONS TO CHANGE WITHOUT NOTICE.
DIMENSIONS ARE FOR REFERENCE ONLY.

	MODEL	DATE
		3/19/2020
株式会社清和光学製作所 SEIWA OPTICAL CO.,LTD	SVL-035-TCD64	DWG.No 146925